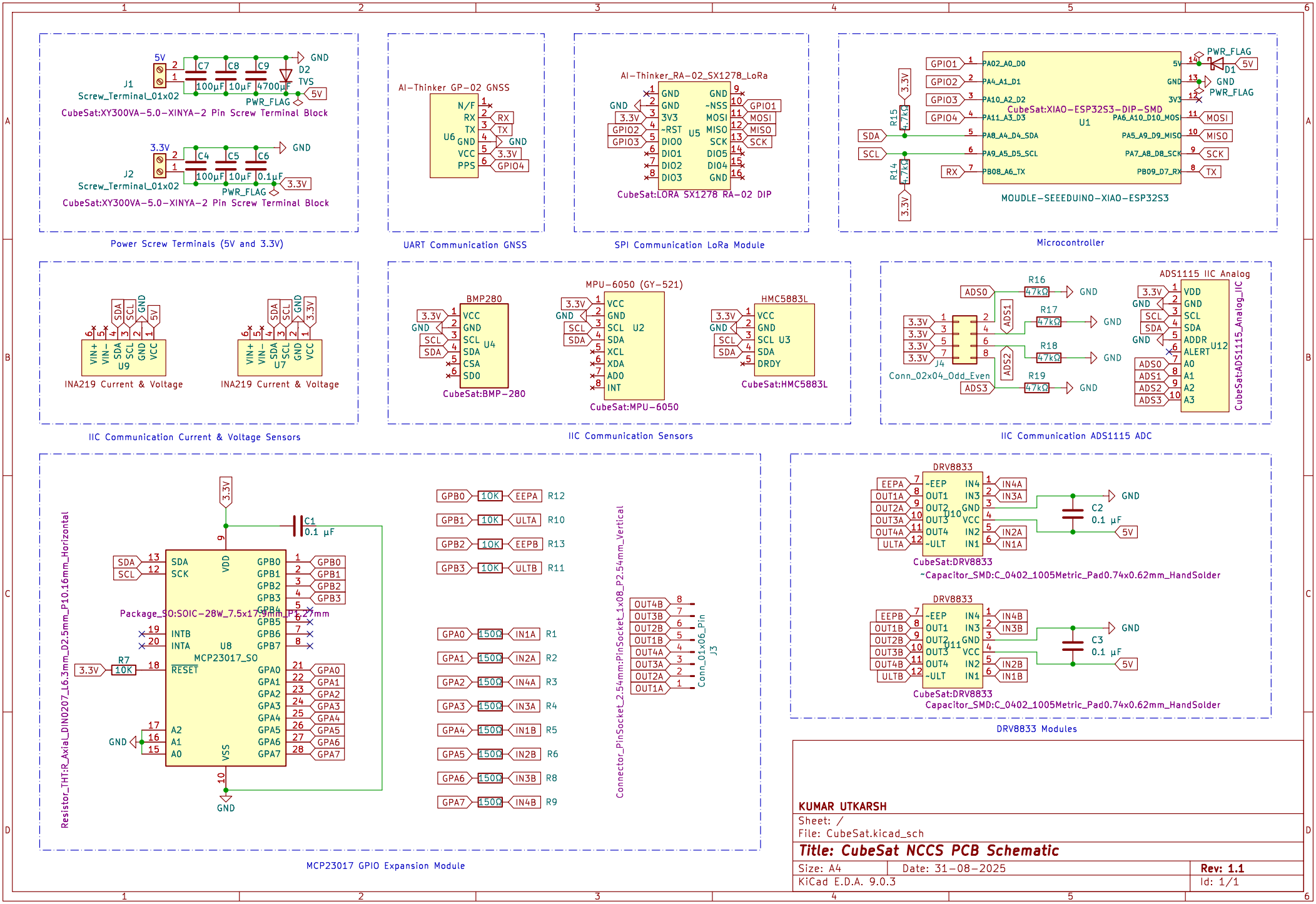
Power Screw Terminals (5V and 3.3V)
J1
Screw_Terminal_01x02
CubeSat:XY300VA-5.0-XINYA-2 Pin Screw Terminal Block
J2
Screw_Terminal_01x02
CubeSat:XY300VA-5.0-XINYA-2 Pin Screw Terminal Block
C7 100µF
C8 10µF
C9 4700µF
D2 TVS
PWR_FLAG
C4 100µF
C5 10µF
C6 0.1µF
UART Communication GNSS
AI-Thinker GP-02 GNSS
U6
SPI Communication LoRa Module
AI-Thinker_RA-02_SX1278_LoRa
U5
CubeSat:LORA SX1278 RA-02 DIP
Microcontroller
U1
CubeSat:XIAO-ESP32S3-DIP-SMD
MOUDLE-SEEEDUINO-XIAO-ESP32S3
D1
R15 4.7kΩ
R14 4.7kΩ
IIC Communication Current & Voltage Sensors
U9
INA219 Current & Voltage
U7
INA219 Current & Voltage
IIC Communication Sensors
BMP280
U4
CubeSat:BMP-280
MPU-6050 (GY-521)
U2
CubeSat:MPU-6050
HMC5883L
U3
CubeSat:HMC5883L
IIC Communication ADS1115 ADC
R16 47kΩ
R17 47kΩ
R18 47kΩ
R19 47kΩ
J4
Conn_02x04_Odd_Even
ADS1115 IIC Analog
U12
CubeSat:ADS1115_Analog_IIC
MCP23017 GPIO Expansion Module
C1 0.1 µF
R7 10K
Package_SO:SOIC-28W_7.5x17.9mm_P1.27mm
MCP23017_SO
U8
Resistor_THT:R_Axial_DIN0207_L6.3mm_D2.5mm_P10.16mm_Horizontal
R12 10K EEPA
R10 10K ULTA
R13 10K EEPB
R11 10K ULTB
R1 150Ω IN1A
R2 150Ω IN2A
R3 150Ω IN4A
R4 150Ω IN3A
R5 150Ω IN1B
R6 150Ω IN2B
R8 150Ω IN3B
R9 150Ω IN4B
Connector_PinSocket_2.54mm:PinSocket_1x08_P2.54mm_Vertical
Conn_01x06_Pin
J3
DRV8833 Modules
DRV8833
U10
CubeSat:DRV8833
~Capacitor_SMD:C_0402_1005Metric_Pad0.74x0.62mm_HandSolder
C2 0.1 µF
DRV8833
U11
CubeSat:DRV8833
Capacitor_SMD:C_0402_1005Metric_Pad0.74x0.62mm_HandSolder
C3 0.1 µF
KUMAR UTKARSH
Sheet: /
File: CubeSat.kicad_sch
Title: CubeSat NCCS PCB Schematic
Size: A4
Date: 31-08-2025
Rev: 1.1
KiCad E.D.A. 9.0.3
Id: 1/1